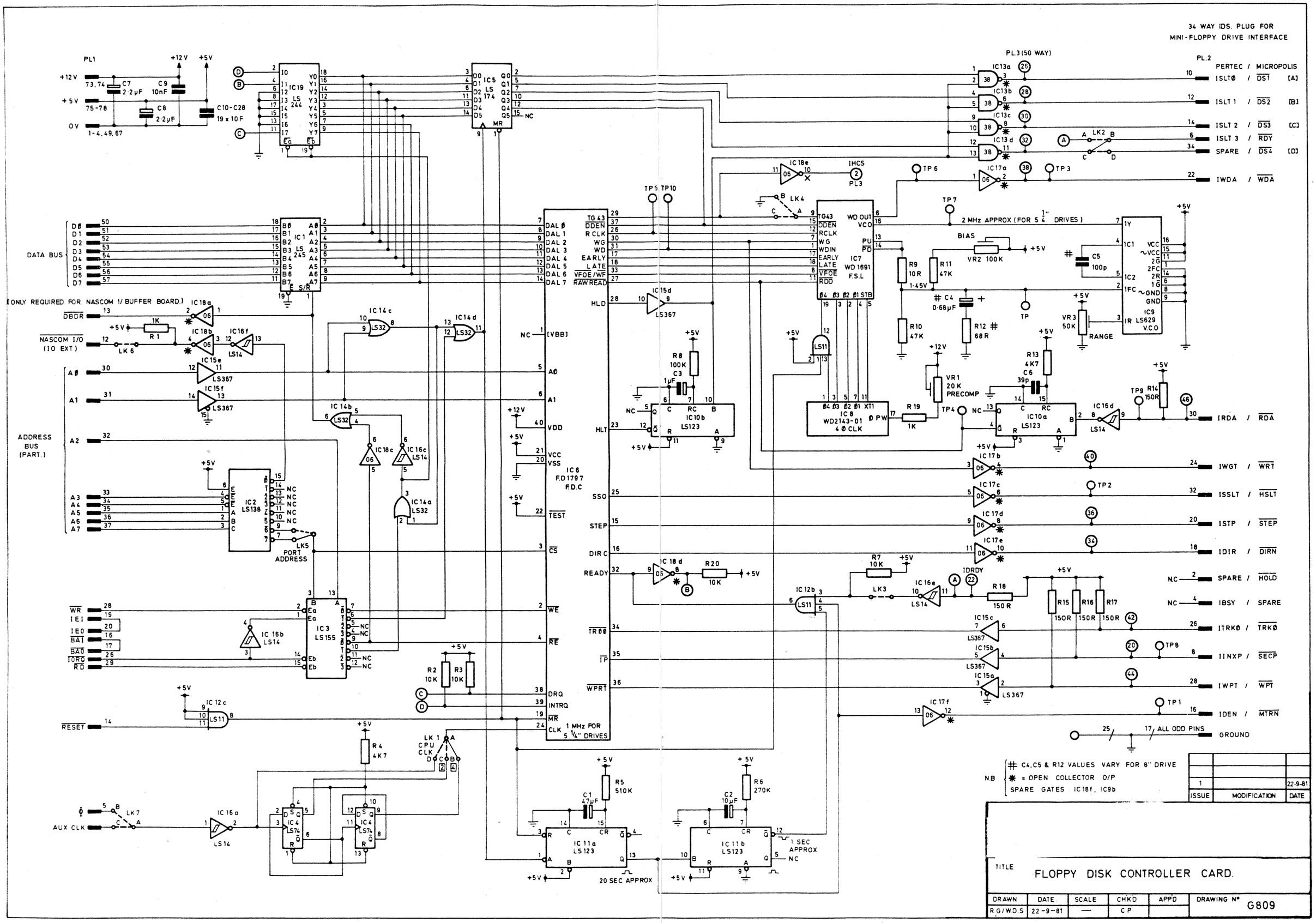
34 WAY IDS. PLUG FOR
MINI-FLOPPY DRIVE INTERFACE
PL.3 (50 WAY)
PL.2
PERTEC / MICROPOLIS
ISLTØ / DS1 [A]
ISLT 1 / DS2 [B]
ISLT 2 / DS3 [C]
ISLT 3 / RDY
SPARE / DS4 [D]
IWDA / WDA
IRDA / RDA
IWGT / WRT
ISSLT / HSLT
ISTP / STEP
IDIR / DIRN
SPARE / HOLD
IBSY / SPARE
ITRKØ / TRKØ
IINXP / SECP
IWPT / WPT
IDEN / MTRN
GROUND
ALL ODD PINS
2 MHz APPROX (FOR 5 1/4" DRIVES)
1 MHz FOR 5 1/4" DRIVES
20 SEC APPROX
1 SEC APPROX
DATA BUS
ADDRESS BUS (PART.)
(ONLY REQUIRED FOR NASCOM 1/ BUFFER BOARD.)
NASCOM I/O (IO EXT)
PORT ADDRESS
AUX CLK
CPU CLK
RESET
N.B # C4, C5 & R12 VALUES VARY FOR 8" DRIVE
* = OPEN COLLECTOR O/P
SPARE GATES IC18f, IC9b
ISSUE
MODIFICATION
DATE
1
22-9-81
TITLE
FLOPPY DISK CONTROLLER CARD.
DRAWN
DATE
SCALE
CHK'D
APP'D
DRAWING N°
R.G/W.D.S
22-9-81
—
C.P
G809